CENTRE SECTION BODY ASSEMBLY

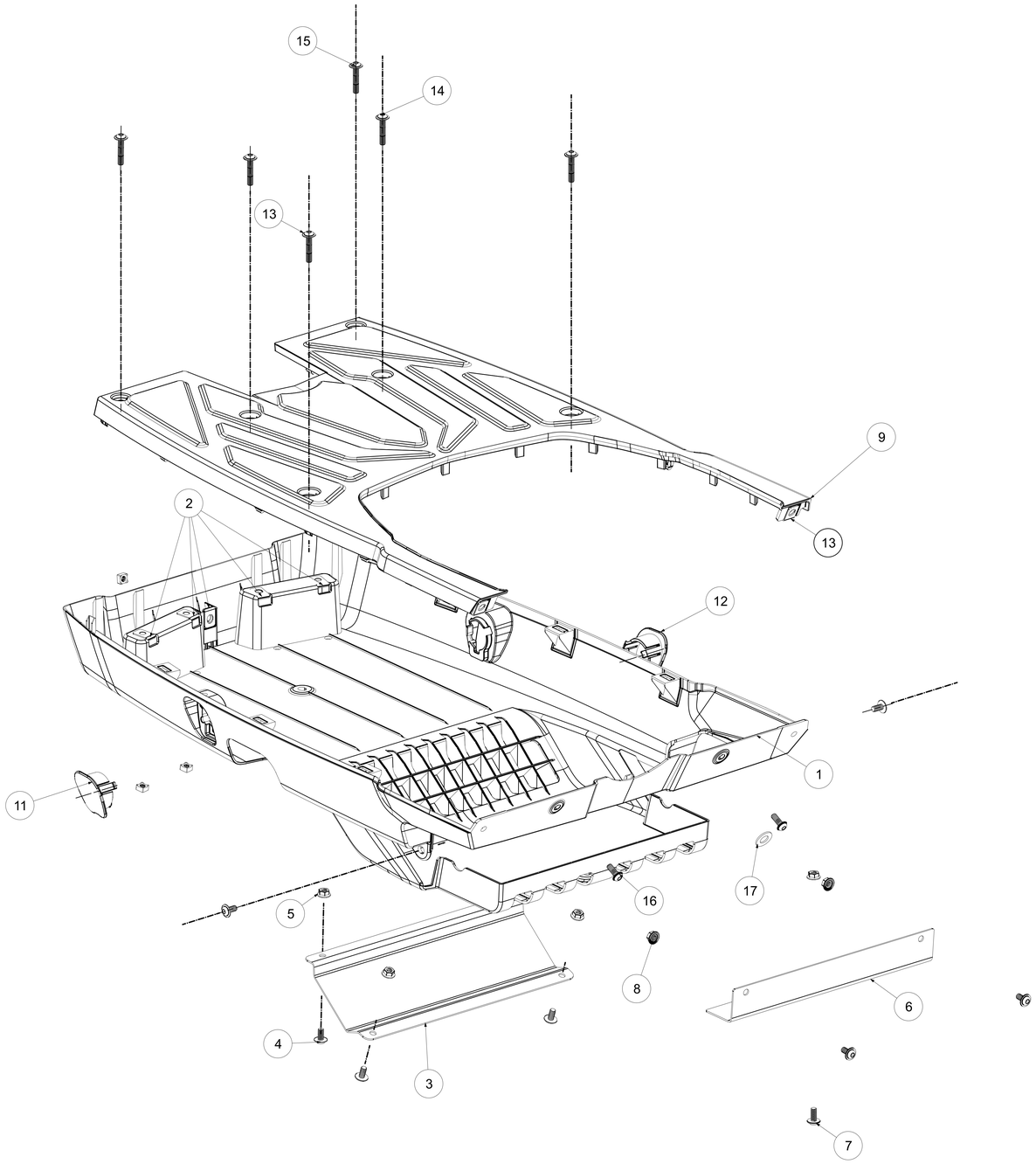

A0